Uncontrolled When Printed

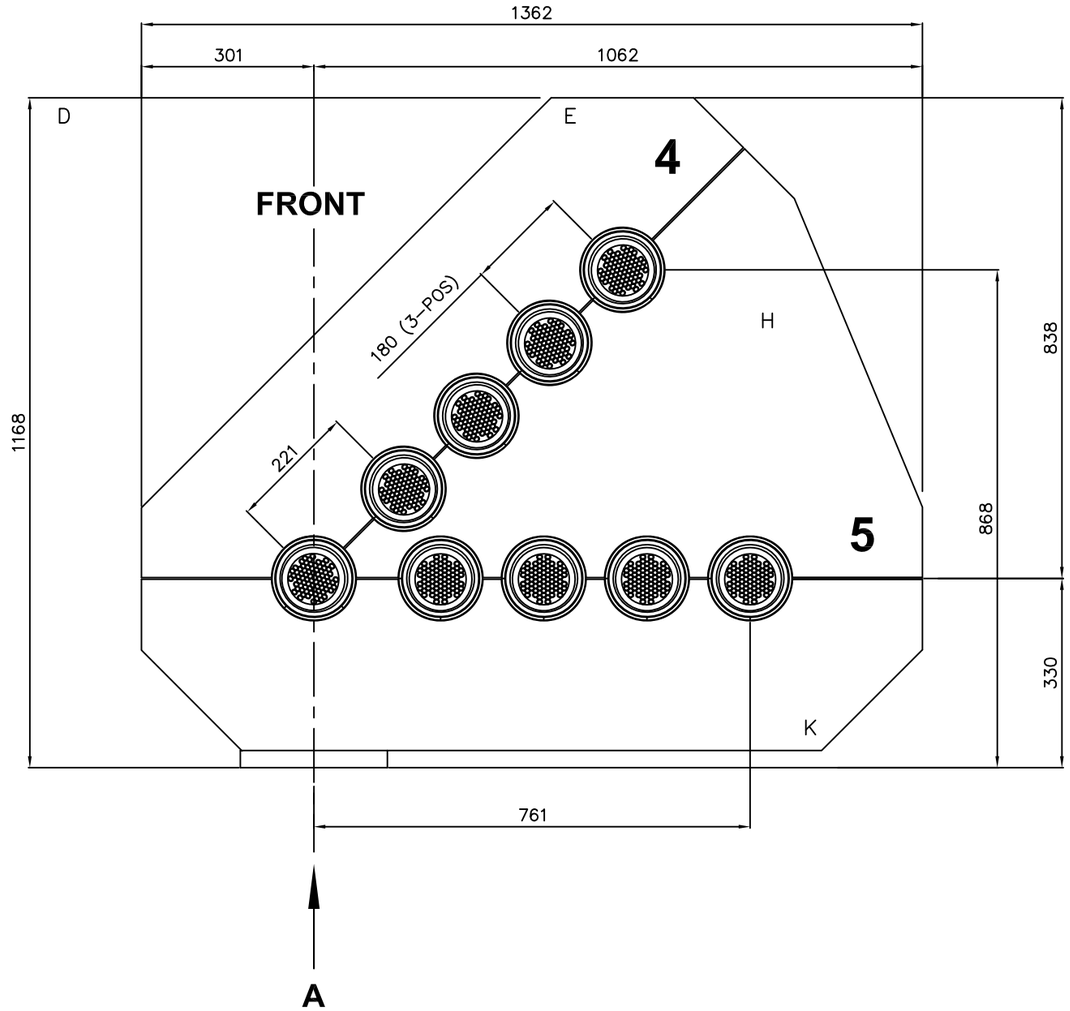

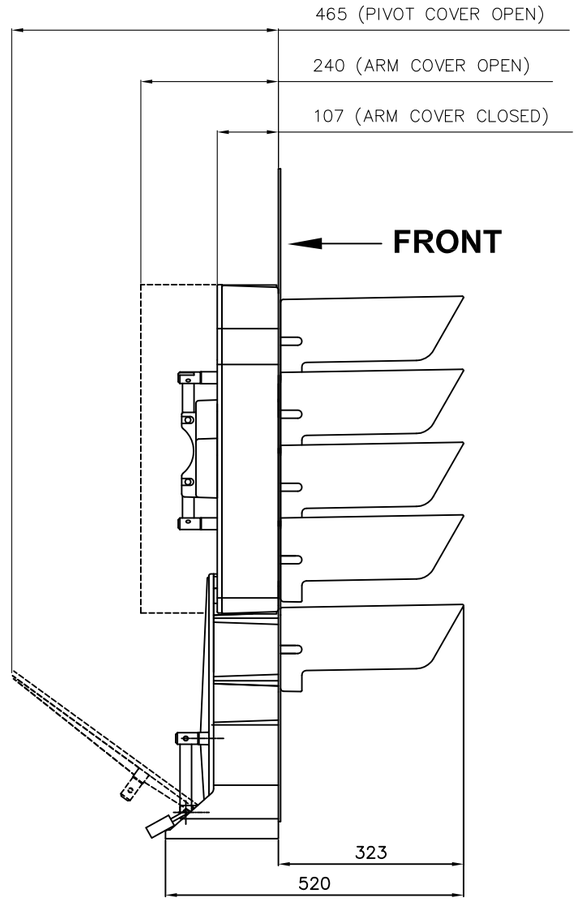

WEIGHT 67KG

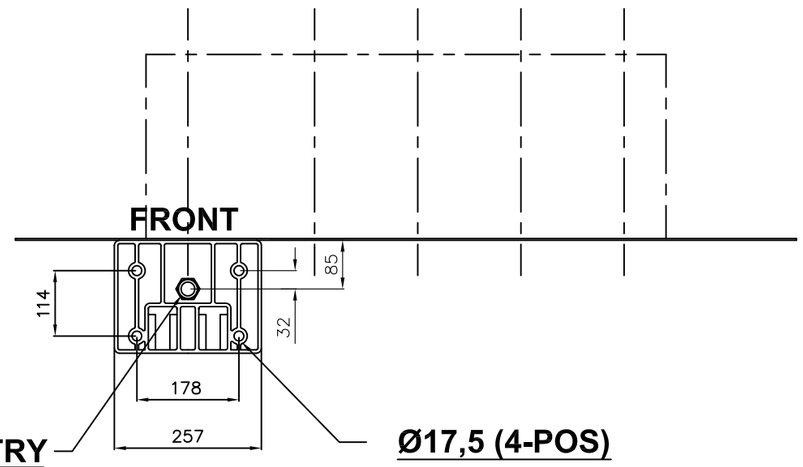

CABLE ENTRY
(32mm GLAND - 36mm A/F)

Ø17,5 (4-POS)

VIEW ON A

DO NOT SCALE

ALL DIMENSIONS IN mm UNLESS OTHERWISE STATED

ISS	DATE	INI	ALTERATIONS
1	03/10/12	CM	SEE DCC6242
0	26/03/07	MD	DCC No. 3564

DORMAN

SOUTHPORT [redacted] ENGLAND

SPACE ENVELOPE/MECHANICAL INTERFACE DRAWING

TITLE: JUNCTION INDICATOR POS 4+5

MATERIAL

TOLERANCES		
X	+ / −	0,25
X,0	+ / −	0,10
X,00	+ / −	0,05
X,000	+ / −	0,025
ANGULAR	+ / −	0.25°

PROJECT No. 104

THIRD ANGLE PROJ

Document N° [redacted]

DRAWN MD

CHECKED IW | AUTH. IW

DATE 26/03/2007

SCALE NTS

SHEET 1 OF 1 SHEETS

THIS DOCUMENT AND THE INFORMATION THEREIN IS CONFIDENTIAL AND MAY NOT BE USED OR DISCLOSED WITHOUT WRITTEN AUTHORIZATION

DRAWING No PART No.
0086/021004

DORMAN REF No. PLJIS/---45-/PO

CUSTOMER REF No.

ORIGINAL DRAWING FRAME A1 | DO NOT SCALE