Uncontrolled When Printed

INTERNAL VIEW OF ENCLOSURE WITH LID REMOVED

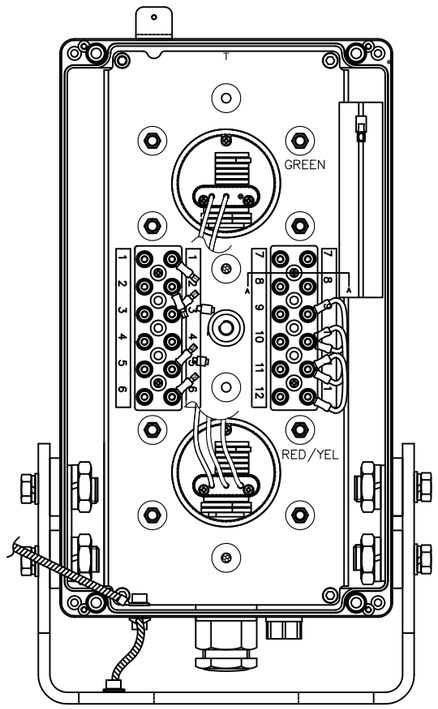

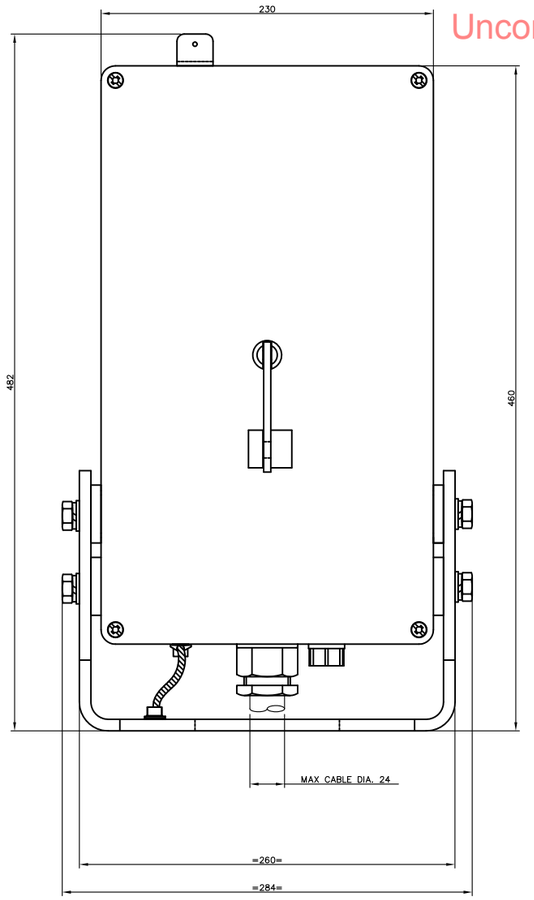

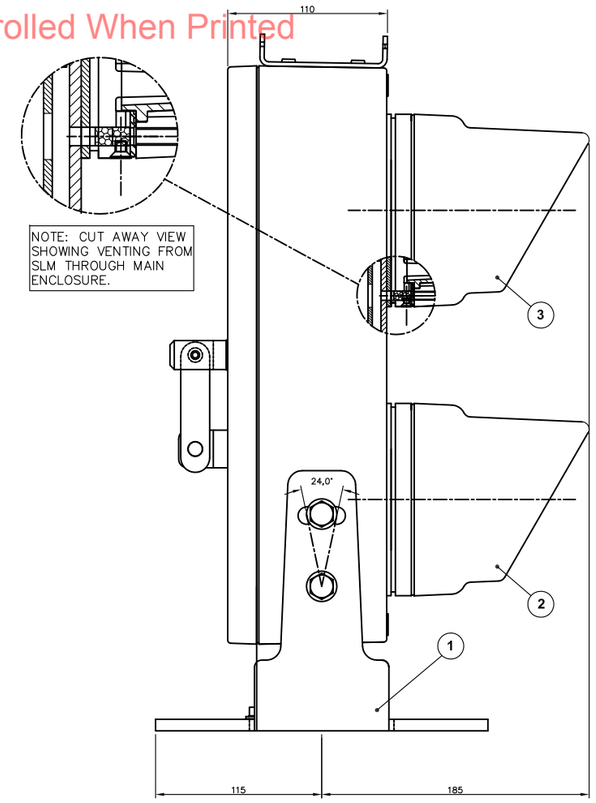

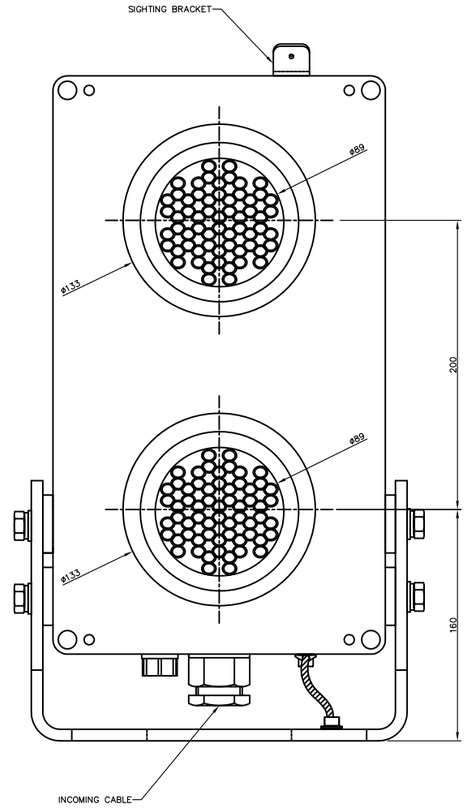

SLM CONNECTION DETAILS	
GREEN SLM	
GREEN	TERMINAL 1 (DGE)
COM	TERMINAL 2 (NX)
RED/YEL SLM	
YEL	TERMINAL 3 (HGE)
RED	TERMINAL 5 (RGE)
COM	TERMINAL 6 (NX)

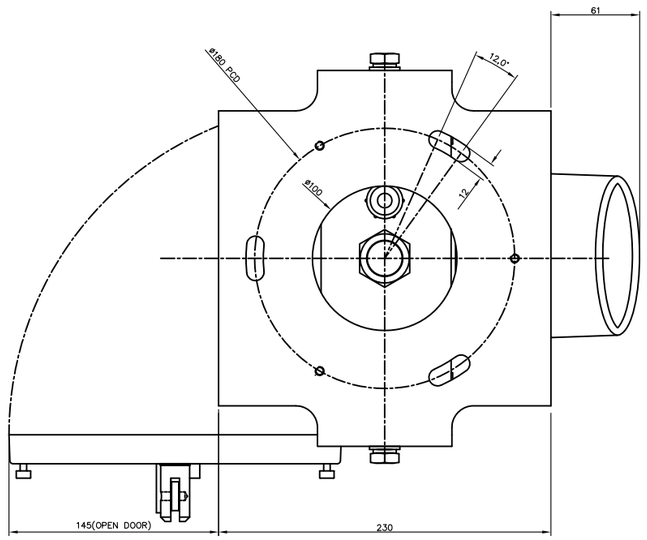

NOTES: –

1. ALL ALUMINIUM COMPONENTS PAINTED ALL OVER WITH:
   ONE COAT OF TRANSPEED TWO PACK ETCH PRIMER 101
   FOLLOWED BY :
   ONE COAT OF BLACK MICACEOUS IRON OXIDE.
   BR SPEC No. 70 ITEM 30. (FORWARD FACING PARTS)
   ONE COAT OF LIGHT GREY MICACEOUS IRON OXIDE.
   BR SPEC No. 70 ITEM 27A. (REAR FACING PARTS)
2. WIRING DIAGRAM AND A DOCUMENT WALLET ATTACHED TO INTERNAL FACE OF THE BACK COVER.
3. ALL FASTENERS ~ STAINLESS STEEL.
4. RKB221 BRASS PADLOCK, PADS No.0086/029003 IS NOT SUPPLIED WITH THIS ASSEMBLY.

ITEM	QTY	DORMAN PART No.	DESCRIPTION
1	1	D86.85167	3 ASPECT ENCLOSURE & FRAME
2	1	M2TM2/RY/1/P/G	MODULE 2 ASPECT RED/YELLOW (PADS No. 086/009237)
3	1	M2TM2/G–/1/P/G	MODULE 1 ASPECT GREEN (PADS No. 086/009238)

TOTAL ASSEMBLED SIGNAL MASS ~ 12Kg.

ISS	DATE	INI	ALTERATIONS
1	07/03/14	MD	SEE ECN449_1
0	18/12/13	MD	[redacted] ECN359_2

DORMAN

[redacted]
SOUTHPORT [redacted] ENGLAND

SPACE ENVELOPE/MECHANICAL INTERFACE DRAWING

TITLE: 3 ASPECT (R/Y/G) MINIATURE TUNNEL SIGNAL (ELEVATED)

THIRD ANGLE PROJ
Document N°

MATERIAL

TOLERANCES		
X	+ / –	0,25
X,0	+ / –	0,10
X,00	+ / –	0,05
X,000	+ / –	0,025
ANGULAR	+ / –	0.25°

DRAWN M DURHAM
APPROVED S.R.
DATE 18/12/13
SCALE NTS
SHEET 1 OF 1 SHEETS

THIS DOCUMENT AND THE INFORMATION THEREIN IS CONFIDENTIAL AND MAY NOT BE USED OR DISCLOSED WITHOUT WRITTEN AUTHORIZATION

DRAWING No PART No. 086/009244

ISSUE [redacted]

ALL DIMENSIONS IN mm UNLESS OTHERWISE STATED

DORMAN REF No. M2TSH/3RYG/1P/E

CUSTOMER REF No.

DO NOT SCALE

ORIGINAL DRAWING FRAME A1 | DO NOT SCALE