Uncontrolled When Printed

Parts List			
ITEM	QTY	PART NUMBER	TITLE
1	1	B91.90001	RAILWAY LED HANDLAMP - BODY - MATERIAL LEXAN 1414. COLOUR BASALT GREY RAL 7012
2	1	B91.90018	RAILWAY LED HANDLAMP BATTERY PACK - MATL: LEXAN 1414. COLOUR BLACK
3	1	B09.08767	BATTERY RELEASE BUTTON - MATL: SANTOPRENE REF NO. 101-80
4	1	B91.90004	RAILWAY LED HANDLAMP LENS - MATL: LEXAN 101R CLEAR
5	1	B91.90005	RAILWAY LED HANDLAMP INDICATOR LENS - MATL: LEXAN 101R CLEAR
6	1	B91.90006	RAILWAY LED HANDLAMP LOW BATT LENS - MATL: LEXAN 101R CLEAR

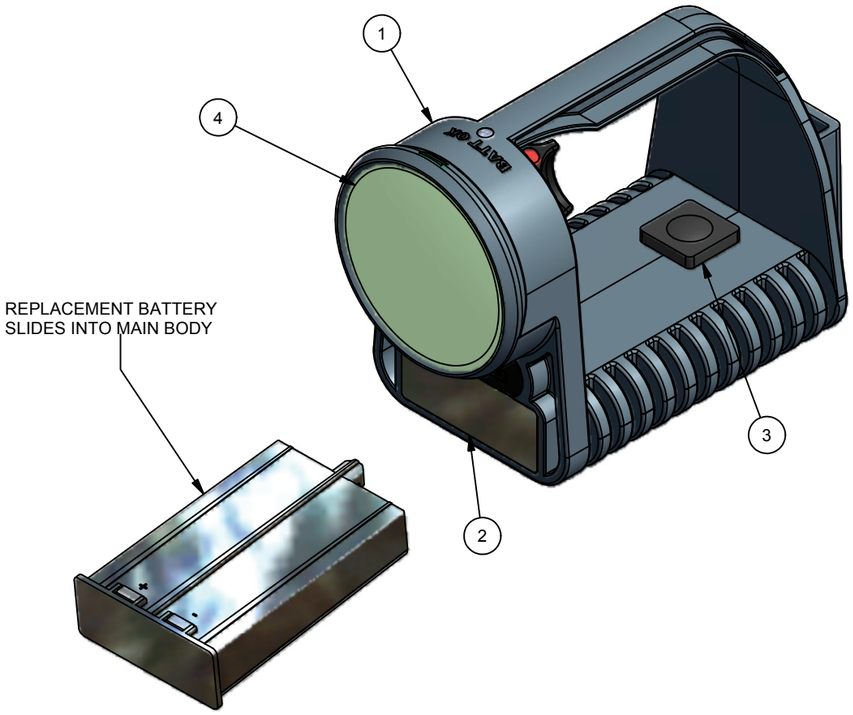

RAILWAY LED HANDLAMP
4 ASPECT:RED-YELLOW-GREEN-WHITE
DORMAN PART NUMBER: RLH2N/RYGW/P/OG
PADS NUMBER: 094/008050

PRODUCT APPLICATION NUMBER: 0518751.3

REPLACEMENT BATTERY
DORMAN PART NUMBER: B91.90018
PADS NUMBER: 094/008051

LAMP WEIGHT: 0.38kg
BATTERY WEIGHT: 0.18kg
TOTAL WEIGHT: 0.56kg

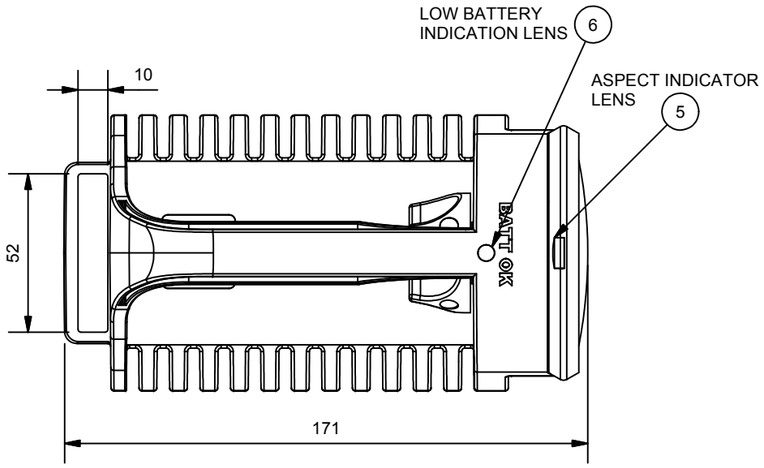

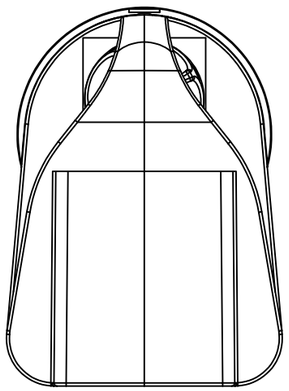

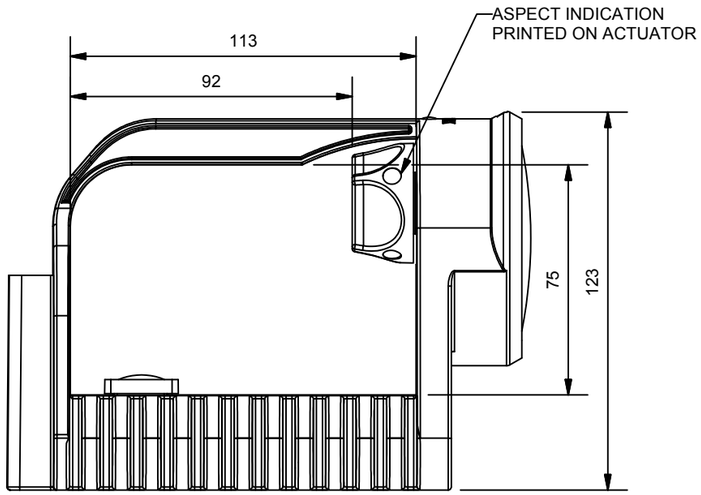

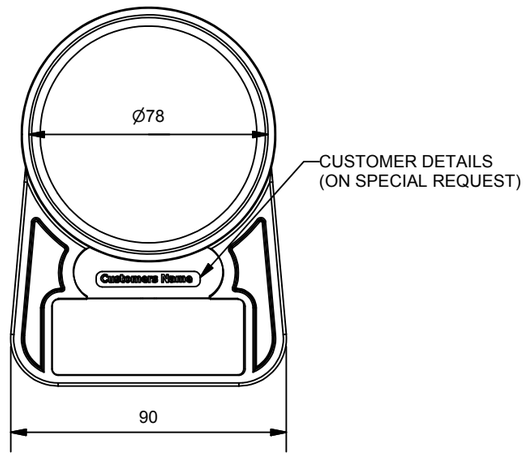

ISS	DATE	INI	ALTERATIONS	
1	09/12/08	DR	SEE DCC4444	
0	28/02/08	IW	ORIGINAL	DCC No 4076

DORMAN

SOUTHPORT PR9 7TN ENGLAND

THIS DOCUMENT AND THE INFORMATION THEREIN
IS CONFIDENTIAL AND MAY NOT BE USED OR DISCLOSED
WITHOUT WRITTEN AUTHORIZATION

DRAWING / PART No
094/008050

PROJECT NO: 118

TITLE RAILWAY LED HANDLAMP CUSTOMER APPROVAL DRAWING

THIRD ANGLE PROJECTION

MATERIAL

TOLERANCES

X	+ / -	0,25
X,0	+ / -	0,10
X,00	+ / -	0,05
X,000	+ / -	0,025
ANGULAR	+ / -	0.25˚

DRAWN	IAN WAREING
CHECK	DR AUTH. BW
DATE	28/02/08
SCALE	NTS
SHEET	1 OF 1 SHEET (S)

ALL DIMENSIONS IN MM UNLESS OTHERWISE STATED

DO NOT SCALE

DORMAN REF No
RLH2N/RYGW/P/0G

094/008050

T:\DEVELOPMENT\P118 RLH RAILWAY LED HANDLAMP\DRAWINGS\PRE-PADS DRAWINGS\094#008050_RAILWAY LED HANDLAMP CUSTOMER APPROVAL DRAWING.sdw