Uncontrolled When Printed

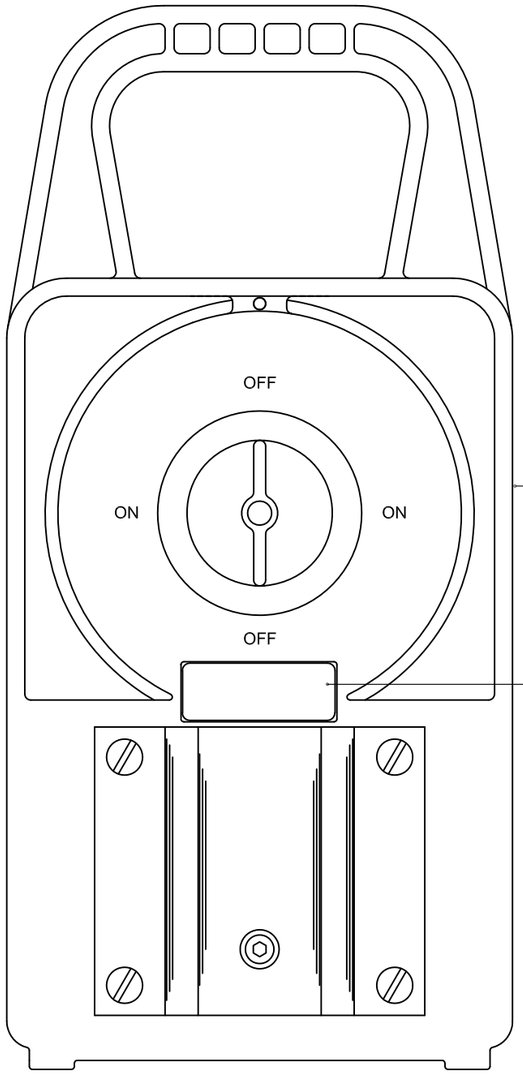

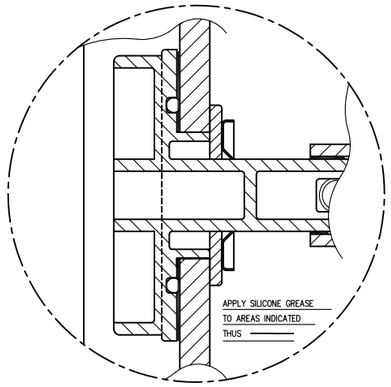

SWITCH ASSY 2:1 SHOWING LUBRICATION DETAILS

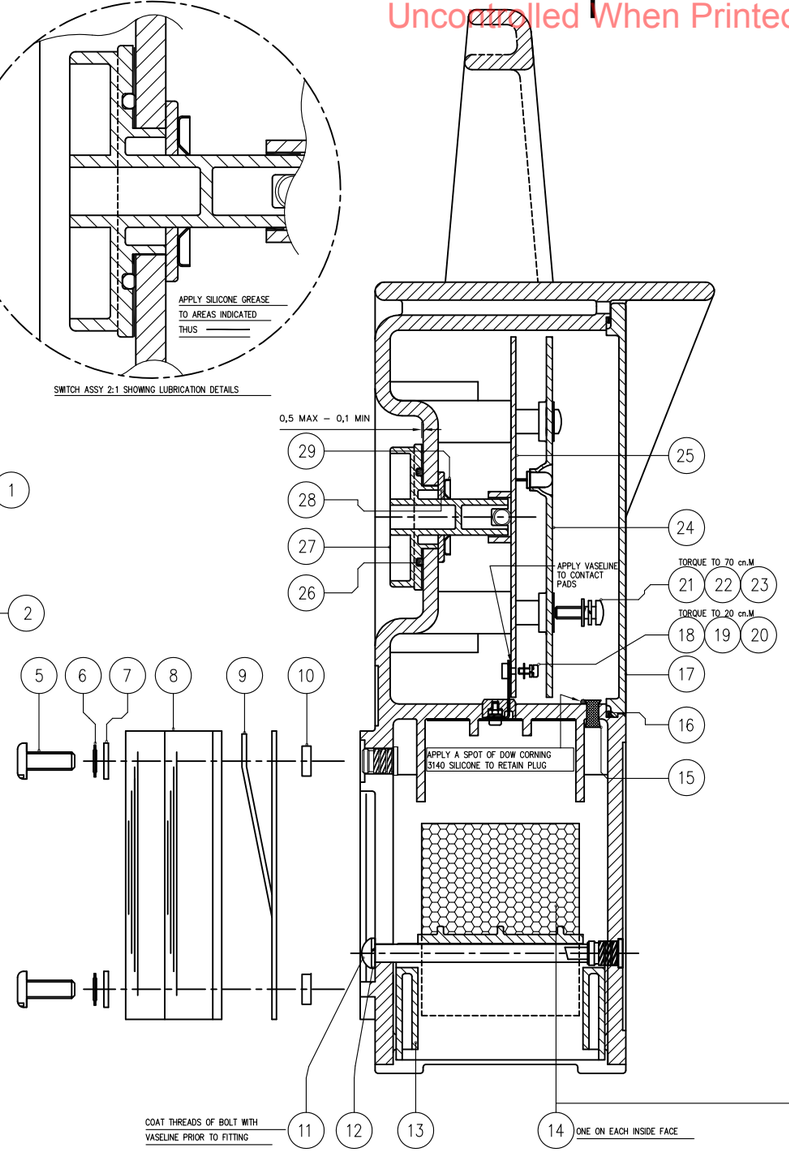

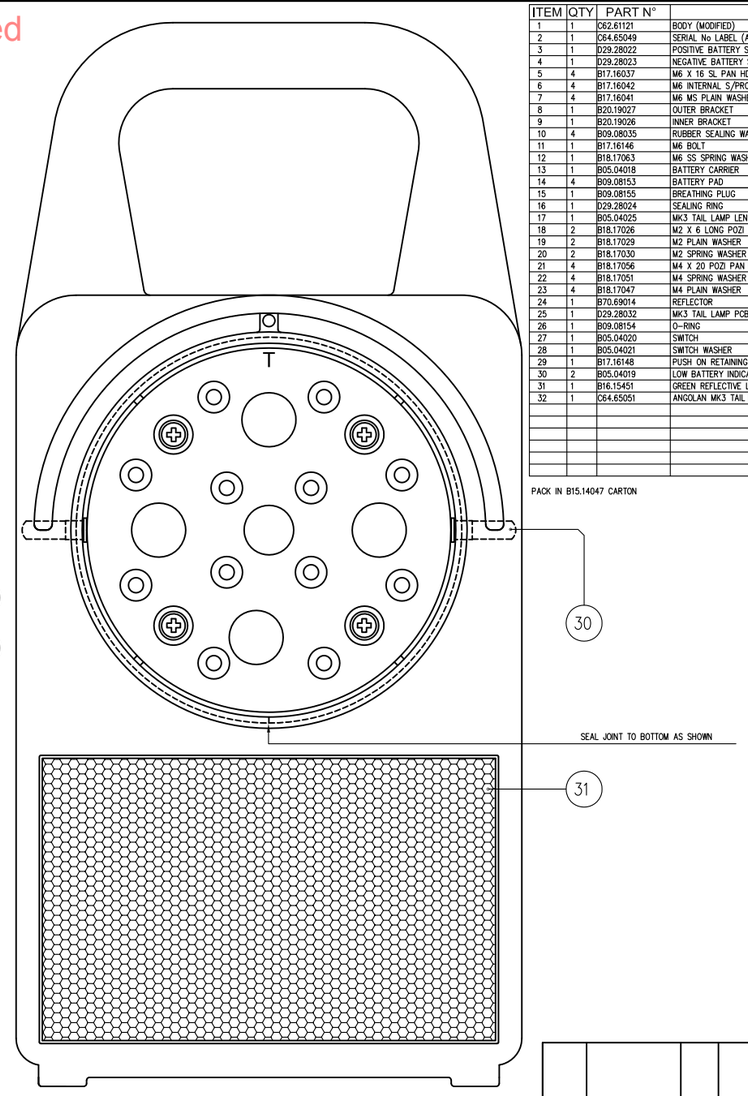

ITEM	QTY	PART N°	DESCRIPTION
1	1	C62.61121	BODY (MODIFIED)
2	1	C64.65049	SERIAL No LABEL (ANGOLAN MK3 TAIL LAMP GREEN)
3	1	D29.28022	POSITIVE BATTERY STRIP ASSEMBLY
4	1	D29.28023	NEGATIVE BATTERY STRIP ASSEMBLY
5	4	B17.16037	M6 X 16 SL PAN HD SCREW
6	4	B17.16042	M6 INTERNAL S/PROOF WASHER
7	4	B17.16041	M6 MS PLAIN WASHER
8	1	B20.19027	OUTER BRACKET
9	1	B20.19026	INNER BRACKET
10	4	B09.08035	RUBBER SEALING WASHER
11	1	B17.16146	M6 BOLT
12	1	B18.17063	M6 SS SPRING WASHER
13	1	B05.04018	BATTERY CARRIER
14	4	B09.08153	BATTERY PAD
15	1	B09.08155	BREATHING PLUG
16	1	D29.28024	SEALING RING
17	1	B05.04025	MK3 TAIL LAMP LENS GREEN
18	2	B18.17026	M2 X 6 LONG POZI PAN HEAD SCREW (SS)
19	2	B18.17029	M2 PLAIN WASHER
20	2	B18.17030	M2 SPRING WASHER
21	4	B18.17056	M4 X 20 POZI PAN HEAD SCREW
22	4	B18.17051	M4 SPRING WASHER
23	4	B18.17047	M4 PLAIN WASHER
24	1	B70.69014	REFLECTOR
25	1	D29.28032	MK3 TAIL LAMP PCB ASSY 2–STEADY GREEN
26	1	B09.08154	O–RING
27	1	B05.04020	SWITCH
28	1	B05.04021	SWITCH WASHER
29	1	B17.16148	PUSH ON RETAINING WASHER
30	2	B05.04019	LOW BATTERY INDICATOR LENS
31	1	B16.15451	GREEN REFLECTIVE LABEL MK3 TAIL LAMP
32	1	C64.65051	ANGOLAN MK3 TAIL LAMP GREEN INSTRUCTION SHEET

PACK IN B15.14047 CARTON

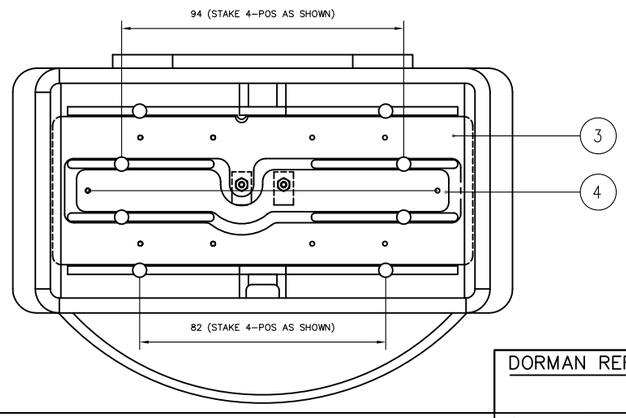

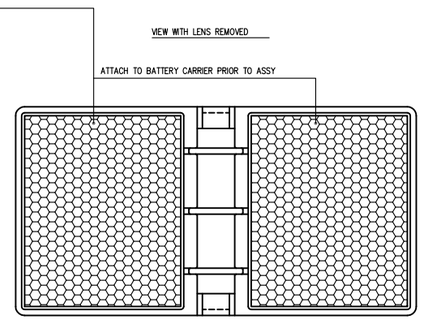

ISS	DATE	INI	ALTERATIONS
2	18/08/14	MD	ECN628_16
1	17/12/13	IW	ECN347
0	07/11/11	AD	ORIGINAL DCC 5740

UNIPART RAIL
DORMAN

UNIPART RAIL LTD – DORMAN
WENNINGTON ROAD, SOUTHPORT. PR9 7TN.

DORMAN REF No.

TITLE
MK3 TAIL LAMP GREEN (ANGOLAN)

PROJECT No.
099

PART NUMBER BARCODE
ARTN3/WSTDY

CUST REF NO.

ALL DIMENSIONS IN MM
UNLESS OTHERWISE STATED.
DO NOT SCALE

3RD ANGLE PROJ

MATERIAL

TOLERANCES		
X	+ / –	0,25
X,0	+ / –	0,10
X,00	+ / –	0,05
X,000	+ / –	0,025
ANGULAR	+ / –	0.25°

DRAWN	A DREWETT		
CHECKED	IW	AUTH.	BW
DATE	04/11/2011		
SCALE	NTS		
SHEET	1	OF 1	SHEETS

© Unipart Rail Limited
THIS DOCUMENT AND THE INFORMATION THEREIN IS CONFIDENTIAL AND MAY NOT BE USED OR DISCLOSED WITHOUT WRITTEN AUTHORIZATION

DRAWING / PART No.
ARTN3/GSTDY

A3