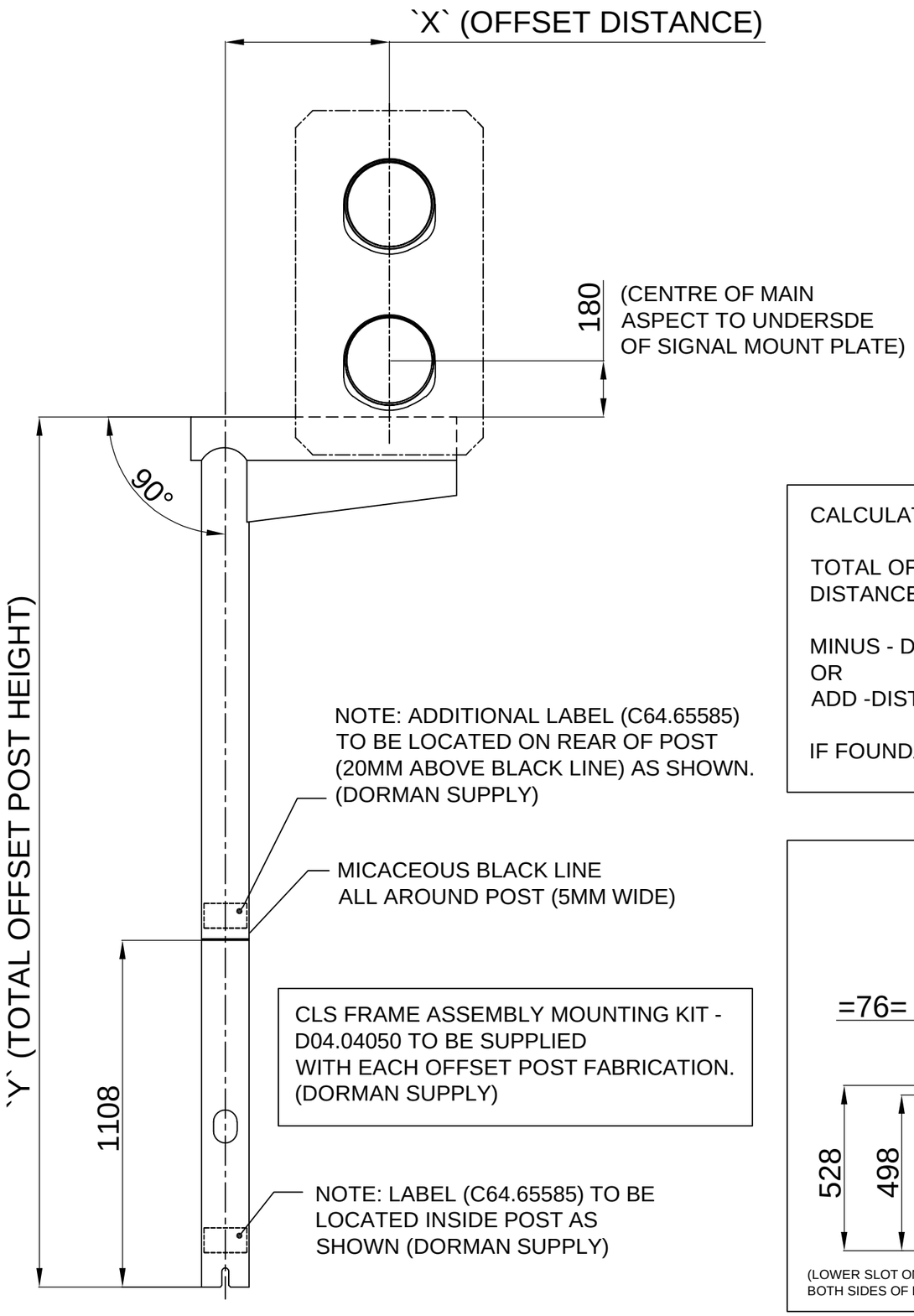

MANUFACTURING NOTES

1) ALL WELDS TO BE CONTINUOUS AND FREE FROM SPATTER.
2) WELD IN COMPLIANCE WITH BS EN ISO 9606
3) REMOVE ALL BURRS AND SHARP EDGES
4) PAINT ALL OVER WITH:
   ONE COAT OF TRANSPEED TWO PACK ETCH PRIMER 101
   FOLLOWED BY:
   ONE COAT OF LIGHT GREY MICACEOUS IRON OXIDE
   - BR SPEC No. 70 ITEM 27A
5) WEIGHT OF SUPPLIED OFFSET POST TO BE IDENTIFIED (POSITION TO BE DETERMINED)

SPARTA MANUFACTURING DRAWING:
18053_OFFSET POST, ASSEMBLY

CALCULATION OF TOTAL OFFSET POST HEIGHT (`Y`)

TOTAL OFFSET POST HEIGHT =
DISTANCE FROM MAIN ASPECT TO RAIL, MINUS (180 + 256 + 80 = 516)

MINUS - DISTANCE FROM TOP OF FOUNDATION TO RAIL (IF FOUNDATION IS ABOVE RAIL)
OR
ADD -DISTANCE FROM TOP OF FOUNDATION TO RAIL (IF FOUNDATION IS BELOW RAIL)

IF FOUNDATION IS LEVEL WITH RAIL, THEN THIS VALUE IS ZERO.

CLS FRAME ASSEMBLY MOUNTING KIT - D04.04050 TO BE SUPPLIED WITH EACH OFFSET POST FABRICATION. (DORMAN SUPPLY)

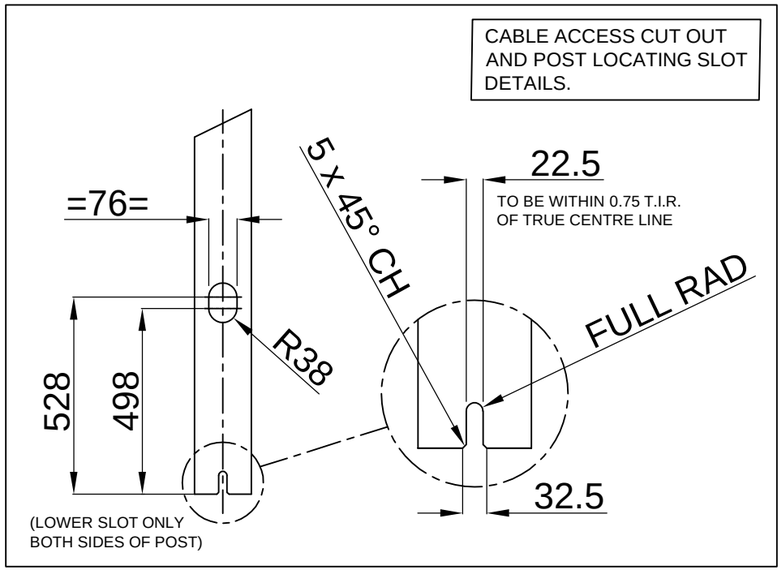

ISS	DATE	INI	ALTERATIONS
1	10/05/21	MD	SEE ECN3638_3
0	22/04/21	MD	ORIGINAL ECN3638_1

UNIPART DORMAN

UNIPART DORMAN
WENNINGTON ROAD, SOUTHPORT. PR9 7TN.

© Unipart Rail Limited 2021
THIS DOCUMENT AND THE INFORMATION THEREIN IS CONFIDENTIAL AND MAY NOT BE USED OR DISCLOSED WITHOUT WRITTEN AUTHORIZATION

PART NUMBER BARCODE

B20.19577

DORMAN REF No.

CUSTOMER REF No.

ALL DIMENSIONS IN MM UNLESS OTHERWISE STATED DO NOT SCALE

3RD ANGLE PROJ

TITLE
OFFSET POST FABRICATION (GENERIC)

MATERIAL

TOLERANCES		
X	+ / −	0,25
X,0	+ / −	0,10
X,00	+ / −	0,05
X,000	+ / −	0,025
ANGULAR	+ / −	0.25°

DRAWN	M DURHAM
CHECKED	AD
AUTH.	PB
DATE	22/04/21
SCALE	1:1
SHEET	1 OF 1 SHEETS

PROJECT No. 164

DRAWING / PART No.
B20.19577

A1